Atlas LIGHTING & HOME
ARTISTRY THROUGH LIGHTING AND STYLE

PRODUCT SPECIFICATION SHEET

ITEM #:	CL11638-BK
UPC	748119202716
Description	Millville 5“ Wide 1-Light Mini Pendant - Matte Black
Finish	Matte Black, Dark Oak
Materials	Steel
Brand	Atlas Lighting & Home
Collection	Millville
Category	Indoor Lighting
Type	Mini Pendant

ITEM DIMENSIONS			
Width	5 inches		
Depth	5 inches		
Height	10 inches		
Weight	2 pounds		
ADDITIONAL DIMENSIONS			
Backplate / Canopy	5 diameter		
HCWO	N/A		
Min. Extension	N/A		
Max. Extension	N/A		
OVERALL HEIGHT			
Min.	18 inches	**Max.**	54 inches
EXTENSION ROD(S)			
Rods: 1-6, 3-12			
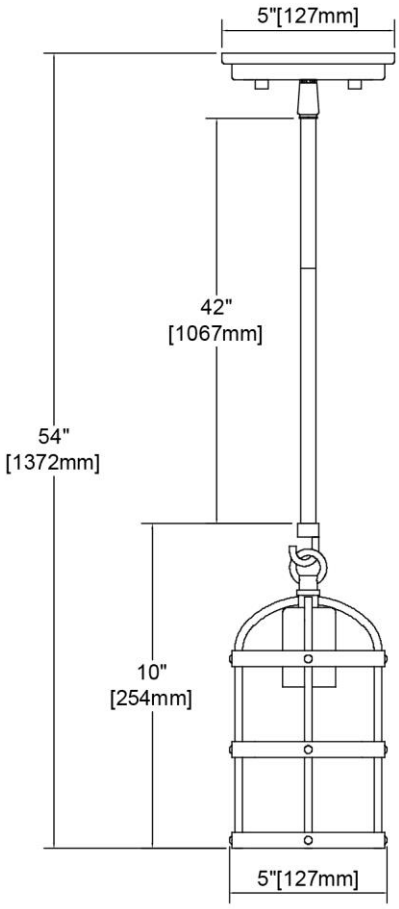
RATINGS & SPECIFICATIONS			
Safety Rating	UL	**Certification**	Dry locations
ADA Compliant	N/A	**Voltage**	120 volts
BULBS / SOCKETS			
Quantity	1	**Wattage**	60 watts
Included	No	**Type**	A19 (E26 Medium Base)
Other	N/A		
CHAIN / CORD INFORMATION			
Chain	N/A	**Cord**	72 inches
SHADE / GLASS DETAILS			
Shade/Glass Description	No Shade/Glass		
Width	N/A	**Height**	N/A
Width at Top	N/A	**Width at Bottom**	N/A