- Be sure to read and understand all instruction sheets completely before beginning assembly or installation.
- All assembly and installation work must be performed by qualified personnel, in accordance with all applicable national and local building and electrical codes.
- Be aware that the weight of some fixtures may exceed the strength rating of the 4" electrical junction box or other such hardware at your site. In all cases, it is the responsibility of the contractor to properly secure the fixture to the structure, and to provide adequate support for the fixture.
- Due to constant production improvements, details of the design, material or finish may change in any way that will not significantly alter installed appearance or reduce function or performance.

Atlas LIGHTING & HOME
ARTISTRY THROUGH LIGHTING AND STYLE

ITEM#: WL11151

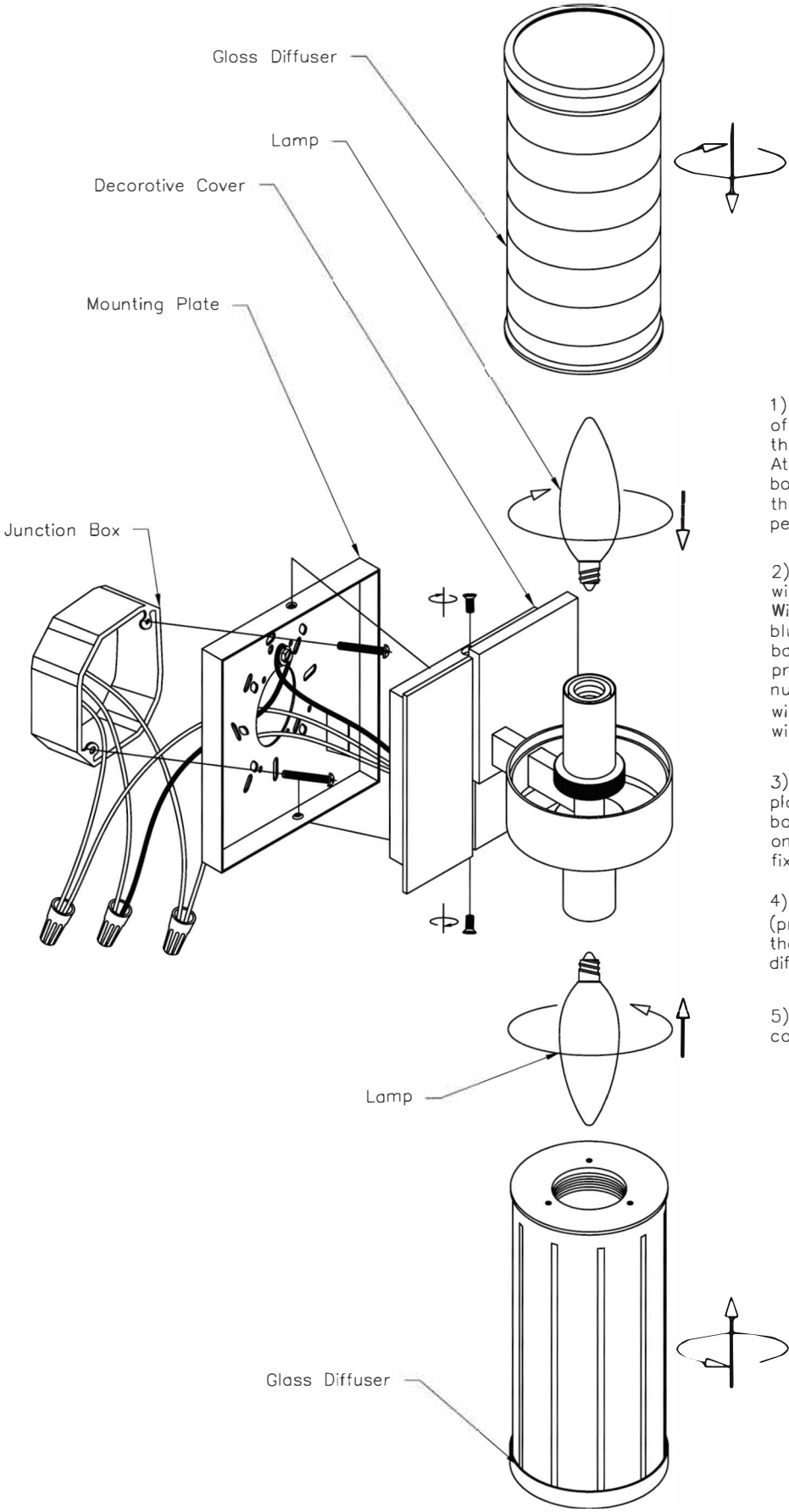

1) Turn the power off! Pull the wires out of the junction box and feed them through the center hole in the mounting plate. Attach the mounting plate to the junction box with the screws provided and adjust the plate so the fixture hongs verticolly perpendicular to the ceiling.

2) Connect the light fixture wires to the wires in the junction box.
Wire black or brown to line voltage, white or blue to neutral, and attach the green or bare wire to the green ground screw provided on the mounting plate. Use wire nuts on the connections and leave no bare wire exposed (excepting the green). Tuck the wires inside the junction box.

3) Secure the light fixture to the mounting plate by lining up the holes on the top and bottom of the mounting plate with the holes on the top and bottom of the lighting fixture. Make sure to fasten securely.

4) Screw the upper and lower lamps (provided by others) into the sockets and then screw the upper and lower glass diffusers into the fixtue cup.

5) Turn the power back on and you have completed the installation process.